PARALLEL APPLICATION
TEMPLATE FOR A RIGHT HAND DOOR

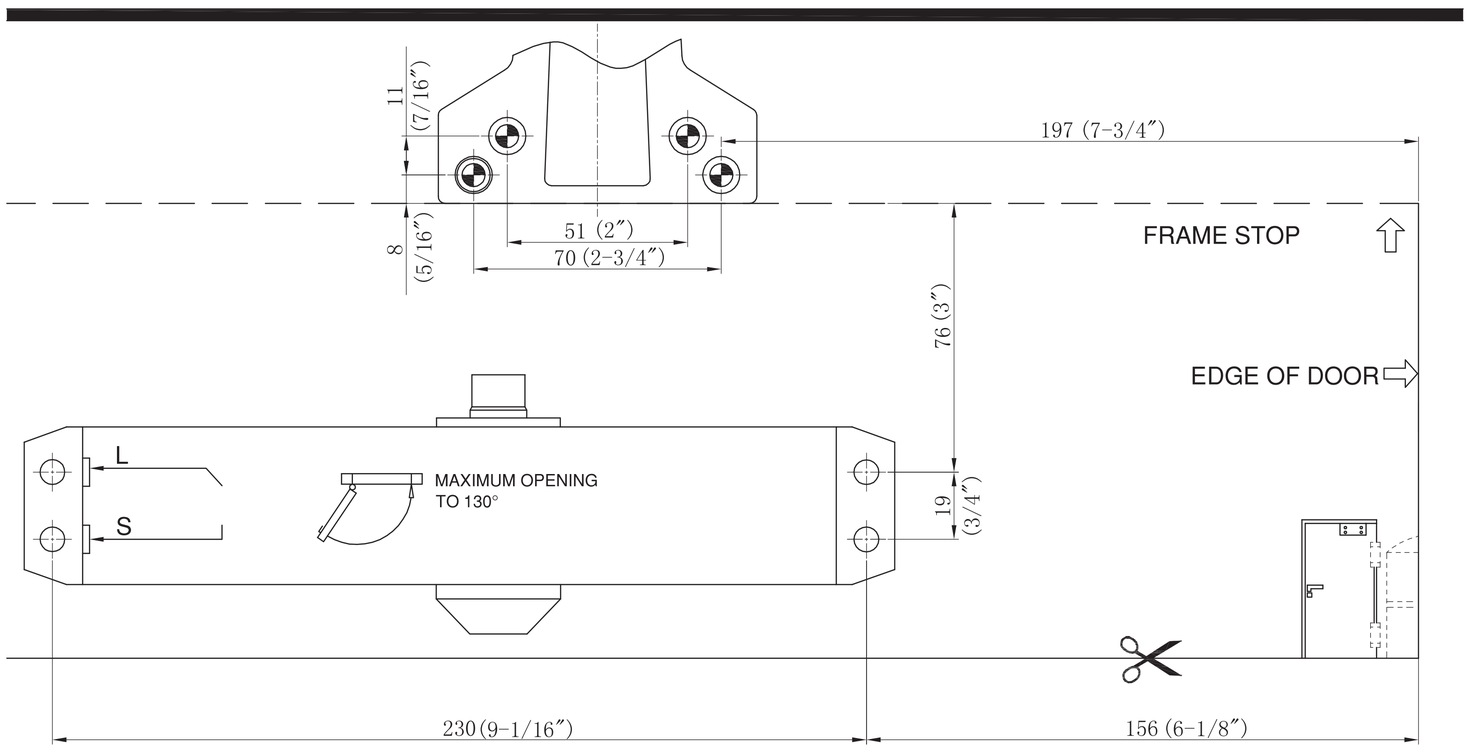
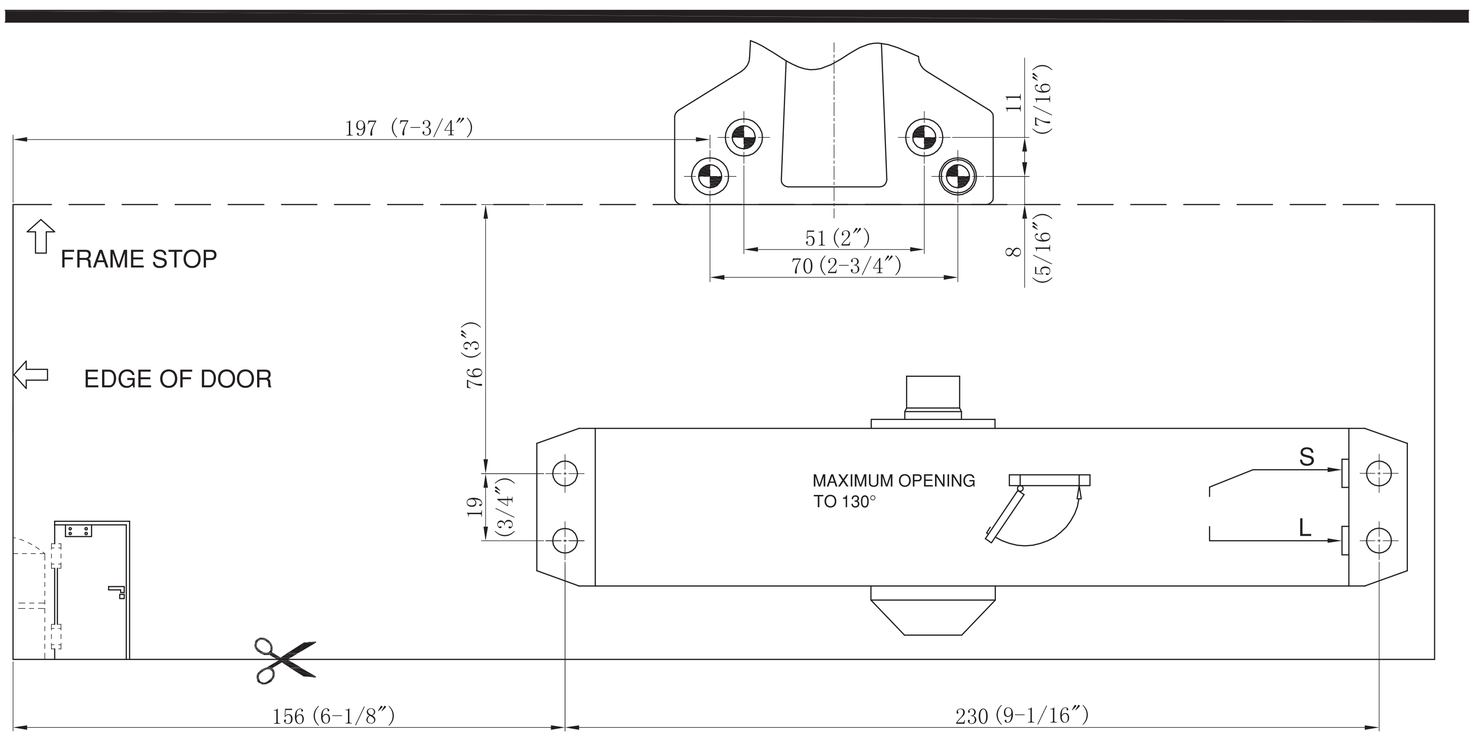
PARALLEL APPLICATION
TEMPLATE FOR A LEFT HAND DOOR